INSTALLATION DATA MANUAL

MODEL 244/344

PRESSURE TRANSMITTER

3829 Forest Parkway, Suite 500
Wheatfield, NY 14120
Int'l: 1-716-629-3800
Toll Free: 1-800-688-0030
Fax: 1-716-693-9162
www.viatran.com

solutions@viatran.com

PRODUCT OVERVIEW

All information contained in this document is representative of a standard Model 244/344. If the product you ordered has special requirements or modifications, refer to the Laser Marked information on the product and your purchase order for possible alteration to the product's configuration. Failure to verify product configuration before installation may cause permanent product damage and in most cases, void the manufacturer's product warranty. If you are unsure or have questions about your product, please contact our Application Engineers for assistance.

Remove and retain all instruction manuals and performance certificates that are shipped with the product. These documents provide important information on the product's calibration, operation, safety precautions, recommended maintenance, re-calibration requirements, repair service instructions and warranty information. These documents are updated from time to time as changes to the product occur and should be reviewed at receipt so that proper and safe installation can occur.

GENERAL REQUIREMENTS & CAUTIONS

1. All electrical & pressure connections should be compatible with the model specifications as outlined below.
2. Installation should occur only after electrical (input power) and line pressure is verified as being off and at zero.
3. Both the 244 and 344 products are susceptible to sensor damage by being dropped, struck, or installed in a high vibration environment.
4. The product's internal electrical circuitry is isolated from case ground. It is not recommended that the case or ground of the unit be connected to the input, output or calibrate pins of the product or wiring system. Ground loops and line noise will affect the product's performance and will in most cases cause internal electrical failure.
5. All products should be protected from direct or continued exposure to fluids at the electrical connection. It is recommended that for products installed in areas where the potential for contamination at the electrical connection is possible a "boot" or other protective measure be taken to eliminate possible deterioration of the product's electrical connection and corrosion that will impede product performance.
6. At no time should an object be inserted into the pressure port or pressed against the sensing area to deflect the sensor (to test or simulate pressure), permanent damage to the sensing diaphragm may occur.
7. Never exert excessive inward force on the adjustment screws, as the potentiometer could break away from the electronics and cause partial or complete electronic failure.
8. Due to the effects of gravity on the oil fill of the sensor, it is recommended that the product be mounted as shown. If the product is mounted on its side (pressure port facing sideways) the effect of gravity will show as zero shift.

BASIC OPERATION

The Models 244 and 344 have external adjustments which allow the user to fine tune the zero reading by use of a potentiometer. They also have adjustment for span and an installed calibration circuit allowing for field calibration. Simple field calibration and reset of the zero and span readings can be achieved by accessing the adjustment screws. *Please note the nylon cover screws must be removed to gain access to the potentiometers.* The adjustment screws are 10 turn potentiometers and only require a slight turn to adjust. The potentiometers will provide a nominal adjustment of approximately ±10% of the Full Scale Output. In normal use, product calibration need only be checked upon initial installation and on an annual schedule thereafter.

INTERNAL CALIBRATION CIRCUIT

The Models 244 and 344 allow for field calibration or resetting of the product's output parameters. A factory installed calibration circuit has a value preset to a known pressure which, when activated, electrically simulates pressure. On the "44" Series, this value is 80% FSO ±1%. The actual equivalent calibration pressure reading is laser marked on the exterior of the product and is listed on the performance certificate. To activate the calibration circuit, it is necessary to connect (short) the two calibration pins listed on the product (and/or) this manual. *Note: When using multiple transmitters, cal circuits must be separated, not tied to a common pole.*

Use of the circuit is explained below:

1. Any and all access screw covers should be removed prior to calibration and reinstalled after calibration has been completed.
2. With power on and the unit at Zero (0) PSIG (for gage and vacuum models), adjust the zero pot on the signal conditioner to read the value as noted for zero on the performance certificate. If the certificate is unavailable then adjust zero for 0.000 volts on 0-5 VDC or 4.00 mA on 4-20 mA units. ***Note: If the product you are calibrating has a special calibration or range, you may have to contact Viatran for a replacement performance certificate so that the actual settings of zero and span are known. A nominal fee will be charged for regeneration of the product's performance certificate.***
3. After completing zero adjustment (and with no increase in pressure applied to the sensor) activate the calibration circuit as listed on the installation data sheet included with this manual. The output should now rise to a reading equivalent to the specified reading on the performance certificate or on the unit's label. If the certificate is not available, the calibration output can also be calculated by using the following formula:

Voltage Output Products: Cal. Output = (Cal. Pressure from label / Pressure Range) x (*FSO)

Current Output Products: Cal. Output = ((Cal. Pressure from label / Pressure Range) x 16) + 4

*Where FSO represents the "Full Scale Output", a 0 to 5 volt unit = 5, a 1 to 5 volt unit = 4, etc.

4. To adjust the calibration reading as needed, use the "Span" adjustment to correct or, if none is needed, simply deactivate the calibration circuit and the unit will return to the "normal" operation mode.
5. If during this process it is determined that the product cannot be adjusted to the required calibration value or, if after adjustment, the product's performance is still in question, contact the factory for assistance.
6. Check the zero reading which may have changed due to interaction with the span adjustment. Steps 1-5 may need to be repeated.

Note: The calibration circuit must be deactivated in order for the product to perform properly.

INSTALLATION DATA - VIATRAN MODEL 244/344

Note: The drawing below is for informational purposes only and is not to scale.
All dimensions are nominal, in inches and for reference purposes only.

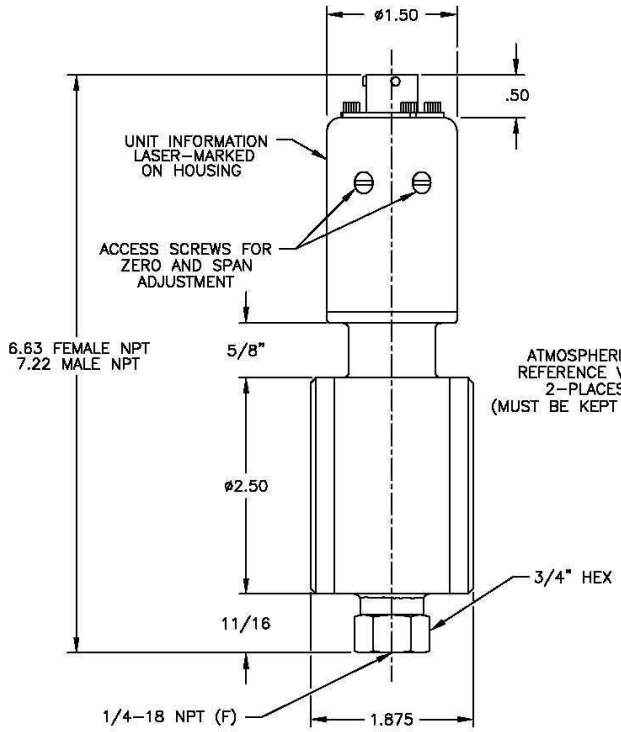

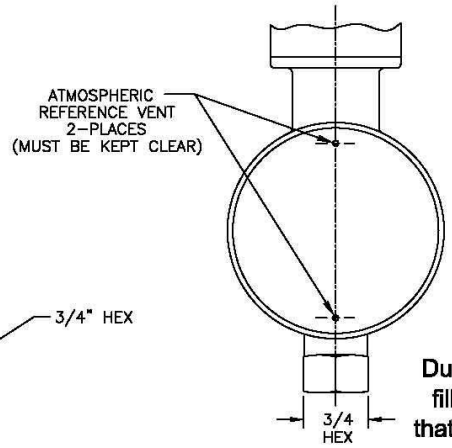

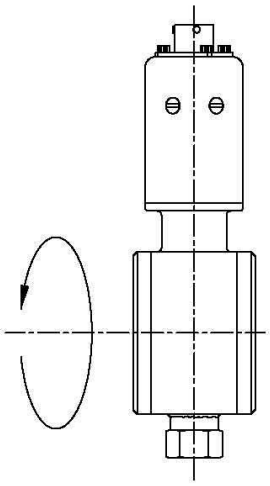

Recommended Mounting

Due to the effects of gravity on the oil fill of the sensor, it is recommended that the product be mounting as shown

MODEL 244
Connector:
PT02E-10-6P
Input:
10 - 42 VDC
Output:
0 - 5 VDC
Cal Shunt:
80% FSPR

MODEL 344
Connector:
PT02E-10-6P
Input:
10 - 42 VDC
Output:
4-20 mA
Cal Shunt:
80% FSPR

Sensor Construction:
Oil Filled - Capacitance Cell
Wetted Parts:
316 SST
Pressure Connection:
1/4" NPT female
Electrical Mating Connection:
Bendix P/N: PT06E-10-6S (SR) or equal

CONNECTION DIAGRAMS & WIRING

MODEL 244

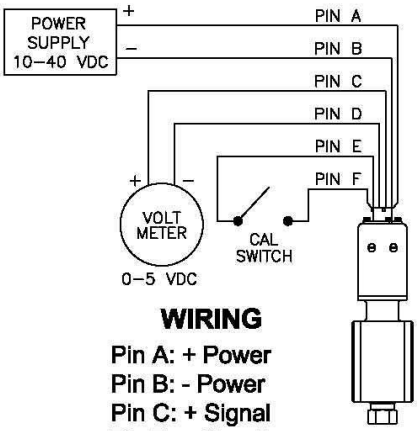

WIRING

Pin A: + Power
Pin B: - Power
Pin C: + Signal
Pin D: - Signal
Pin E: Calibrate
Pin F: Calibrate

MODEL 344

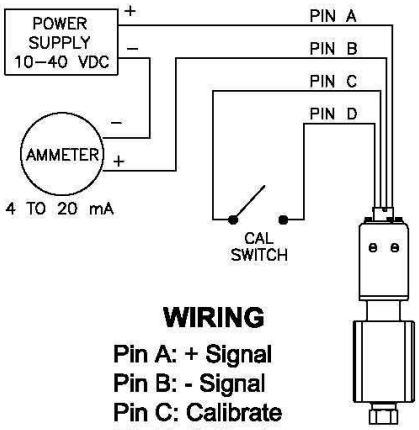

WIRING

Pin A: + Signal
Pin B: - Signal
Pin C: Calibrate
Pin D: Calibrate
Pin E: No Connection
Pin F: No Connection

ACCESSORIES - OPTIONAL EQUIPMENT

Mating Electrical Connector 10MSPT1106
Mating Electrical Cable Assembly (Improved Shielding)..... 230043.012
Protective Cover ……..…….…….. 230425.002
Digital Meter……..... Consult Factory

MAINTENANCE AND REPAIR

All Viatran transmitters have been designed to function free from routine or scheduled maintenance. Simple cleaning of the electrical connector, pressure port threads and pressure cavity on an as needed basis will provide many years of satisfactory performance. Protecting the product from continued exposure to moisture or fluids at the electrical connection will eliminate premature internal failure of the product. Generally any time the product is removed from service the connector and pressure port threads should be cleaned and the pressure cavity flushed with a 316SS compatible cleaner to prevent media buildup. During the cleaning process only a soft, lint-free cloth is recommended. Never use a coarse or stiff bristle brush to clean media from the diaphragm surface.

It is suggested that the calibration be verified on a usage dependent schedule. If the product is in continuous service 7 days a week, then calibration verification may be necessary every 6 to 8 months. If the product is in a lab test environment a more lenient verification schedule would be appropriate. In all instances the performance of the product will depend on the individual application or process in which it is installed. More continued usage would require a shorter period between calibration verification and product maintenance.

If a product is perceived to be exhibiting problems, it can be returned to Viatran for analysis and/or repair. It is suggested that only Viatran personnel attempt repair of the product. Any damage resulting from customer disassembly would result in a loss of coverage under the warranty policy. All Viatran products are able to be repaired at minimal cost if simple cleaning and precautions are taken in the handling and application of the product. Older products returned for repair are updated to current specifications unless the repair cost would outweigh the cost of a new replacement model. Products returned for repair should include information on the person to contact for repair quote approval, the individual to contact if Viatran's technical staff requires additional information during analysis, and a brief description of the problem associated with the product's failure.

WARRANTY

Viatran Corporation warrants that its products shall be free from defective workmanship and/or material for a period of twelve (12) months from the date of shipment, provided that Viatran's obligation hereunder shall be limited to correcting any defective workmanship and/or replacing any defective material f.o.b. factory. No allowance will be made for any expense incurred for correcting any defective workmanship and/or material without written consent by Viatran. This warranty is in lieu of all other warranties expressed or implied.

REPAIR INSTRUCTIONS

Viatran's Transmitters are designed to be easily repaired and recalibrated if necessary. If a failure occurs, the transmitter should be returned to the factory for inspection and testing. Please contact the Customer Support Department at 1-800-688-0030, for a return tracking number and/or a repair cost estimate. A nominal inspection fee is charged on all units returned to the factory which are not subsequently repaired.

3829 Forest Parkway, Suite 500
Wheatfield, NY 14120
Int'l: 1-716-629-3800
Toll Free: 1-800-688-0030
Fax: 1-716-693-9162
www.viatran.com
solutions@viatran.com